(25,400)

SUPREME COURT OF THE UNITED STATES.

OCTOBER TERM, 1917.

No. 226.

THE T. H. SYMINGTON COMPANY, PETITIONER,

vs.

THE NATIONAL MALLEABLE CASTINGS COMPANY AND J. J. BYERS.

ON WRIT OF CERTIORARI TO THE UNITED STATES CIRCUIT COURT OF APPEALS FOR THE FIRST CIRCUIT.

INDEX.

	Original.	Print
Caption	*a*	1
Transcript of record from the district court of the United States for the district of Maine	1	1
Bill of complaint	1	1
Plaintiffs' Exhibit 1—Letters patent to Byers, No. 673,419, May 7, 1901	6	4
Plaintiffs' Exhibit 8—Plaintiffs' interrogatories and defendant's answers thereto	15	5
Diagrams	20	8
Testimony of Joseph P. Livermore	22	10
George A. Johnson	59	32
Goodrich Q. Lewis	70	40
Jacob J. Byers	81	47
Edward N. Byers	105	64
John F. McGill	114	70
George W. White	122	76

JUDD & DETWEILER (INC.), PRINTERS, WASHINGTON, D. C., MAY 16, 1917.

	Original.	Print
Testimony of George A. Johnson (recalled)	126	79
Joseph P. Livermore (recalled)	158	100
Frederick Julian	181	114
Plaintiffs' Exhibit 4—Drawing (blue-print sent to B. & M. by Miner in September, 1912)	198	124
11—Letter of December 5, 1899, Byers to N. M. C. Co.	201	125
Copy of letter, December 7, 1899, N. M. C. Co. to Byers	201	125
Letter of December 9, 1899, Byers to Mark	202	125
Copy of letter, December 11, 1899, N. M. C. Co. to Byers	202	126
Letter, December 17, 1899, Byers to N. M. C. Co.	203	126
Letter, December 26, 1899, Byers to N. M. C. Co. (sketch on third page)	204	127
13½—McGill letter	207	126
14—White's sketch, Byers' second model.	208	130
16—Patent Office history of Byers' patent in suit	209	131
Commissioner's certificate	209	131
Application for letters patent	210	131
Report of examiner, May 12, 1900	219	138
Amendments, July 5, 1900	221	139
Report of examiner, August 7, 1900.	223	141
Amendments, September 29, 1900	224	141
Report of examiner, October 14, 1900.	226	143
Amendments, October 16, 1900	227	143
Allowance of patent, October 26, 1900	228	144
Reference to examiner	230	145
Amendments, April 3, 1901	231	145
Notice by chief clerk, April 5, 1901	232	146
Memorandum	233	146
Allowance of improvement, April 13, 1901	234	147
Application of Byers, forming part of patent No. 673,419	235	147
18—Almanac for 1915	240	150
Clerk's certificate to vol. 1	241	151
Clerk's certificate, circuit court of appeals	242	152
Caption to vol. 2	243	153
Answer to amended bill	1	153
Defendant's answers to plaintiffs' interrogatories	6	156
Stipulation of facts	9	158
Testimony of August G. Sandman	10	159
H. L. Trimyer	32	174
W. Scott Wright	52	187
Charles S. Darrach	97	217

	Original.	Print
Testimony of W. H. Emerick	117	229
Delbert H. Decker	140	244
Arthur H. Weston	204	285
Defendant's Exhibit A—W. Scott Wright's sketch	214	292
R—Certified copy of the file of the Emerick patent, introduced by stipulation	215	293
Commissioner's certificate	215	293
File endorsements	216	293
Letter, Brown & Darby to Commissioner, May 22, 1901	217	294
Petition	218	295
Examiner's report, June 29, 1901	226	300
Amendments, July 12, 1901	227	301
Examiner's report, July 26, 1901	232	305
Amendments, August 13, 1901	234	305
Examiner's report, September 5, 1901	240	309
Amendments, October 15, 1901	241	310
Examiner's report, November 2, 1901	244	312
Amendments, December 7, 1901	245	312
Examiner's report, December 24, 1901	246	313
Amendments, December 28, 1901	247	313
Allowance of patent, January 15, 1902	249	315
Letter, Brown & Darby to Commissioner, January 27, 1902	251	316
Application	252	316
Q—Certified copy of the decision of the district court of Illinois, eastern division, in the case of T. H. Symington Co. *vs.* Wm. H. Miner, equity No. 30700	259	321
Letters patent, Perry, No. 228,385, June 1, 1880	262	322
Hinson, No. 635,322, October 24, 1899	266	322
Frost, No. 532,272, January 8, 1895	272	322
Frost, No. 510,854, December 12, 1893	280	322
Reagan, No. 491,785, February 14, 1893	288	322
Simons, No. 627,540, June 27, 1899	294	322
Miner, No. 570,038, October 27, 1896	298	322
Pilcher, No. 616 965, January 3, 1899	306	322
Emerick, No. 693,643, February 18, 1902	318	322
Clerk's certificate to vol. 2	324	323
Clerk's certificate, circuit court of appeals	325	323
Caption to vol. 3	1	325
Memoranda as to pleadings	3	325
Petition for leave to file interrogatories	4	326
Affidavit of William G. McKnight	5	327
Order as to interrogatories	6	328

	Original.	Print
Memorandum as to interrogatories	6	328
Motion to amend bill of complaint	6	328
Motion for costs, &c	7	329
Objections to interrogatories	7	329
Amendments to interrogatories	8	330
Order allowing amendment to complaint	9	331
Memorandum as to defendant's answers, &c	10	331
Memorandum as to answer to amended bill	10	331
Petition as to taking testimony	10	331
Orders as to proof	11	332
Petition to amend answer	13	334
Memorandum as to amended answer	13	334
Final decree	14	334
Opinion, Hale, J	15	335
Petition for appeal	25	342
Assignment of errors	25	343
Bond on appeal	26	343
Præcipe as to record	27	344
Stipulation as to exhibits	29	345
Citation and service	30	346
Clerk's certificate	31	347
Order of enlargement of time for docketing, &c	32	348
Opinion, Bingham, J	33	348
Petition for rehearing	45	356
Letters patent, Mitchell, 517,146, March 27, 1894	58	3 2
Motion for amendment of decree	63	364
Opinion *per curiam*	69	366
Final decree	71	367
Order granting leave to file motion to amend decree	71	368
Order denying petition for rehearing	72	368
Order amending decree	72	368
Motion to stay mandate	73	369
Order staying mandate	73	369
Clerk's certificate	74	370
Writ of certiorari and return	75	370

a Volume I.

United States Circuit Court of Appeals for the First Circuit. October Term, 1915.

No. 1147.

THE NATIONAL MALLEABLE CASTINGS COMPANY et al., Plaintiffs, Appellants,

v.

THE T. H. SYMINGTON COMPANY, Defendant, Appellee.

Appeal from the District Court of the United States for the District of Maine, from final decree (Hale, *J.*), May 24, 1915.

Certified Copy of Record and all proceedings in said cause to and including July 1, 1915.

1 District Court of the United States, District of Maine.

In Equity. No. 705.

On Patent No. 673,419.

THE NATIONAL MALLEABLE CASTINGS COMPANY and JACOB J. BYERS, Plaintiffs,

vs.

THE T. H. SYMINGTON COMPANY, Defendant.

Bill of Complaint as Amended April 20, 1914.

The plaintiffs for their bill of complaint allege:

First. That Jacob J. Byers is a citizen of the United States and of the State of Illinois, residing in the city of Chicago, in said State, and that The National Malleable Castings Company is a corporation duly organized and existing under the laws of the State of Ohio, and a citizen of said State, having its principal place of business in the city of Cleveland, County of Cuyahoga, State of Ohio; and that on information and belief the above-named defendant, The T. H. Symington Company, is a corporation organized and existing under the laws of the State of Maine, and a citizen of said State.

Second. That, as your orators are informed and believe, on the 21st day of April, 1900, Jacob J. Byers, being, within the meaning of the Statutes of the United States then in force, the inventor of certain improvements in Draft Rigging, and being entitled to a

patent thereon under the provisions of said Statutes, duly
2 filed in the United States Patent Office an application for Letters Patent for said invention, and, on the 7th day of May, 1901, all of the requirements of the Statutes of the United States then in force having been duly complied with, Letters Patent of the United States, numbered 673,419, were duly issued on said application to Jacob J. Byers, assignor of an one-half interest to The National Malleable Castings Company, which said Letters Patent, or a certified copy thereof, your orators will produce as this Court shall direct.

Third. That the plaintiffs are now and were, during the period of infringement herein complained of, the owners of said Letters Patent No. 673,419.

Fourth. That, as your orators are informed and believe, the defendant has infringed said Letters Patent, and particularly claims 1, 2, 3, 5, 6, 7, 8 and 10 thereof, and threatens to continue so to infringe, and as an example of infringement the plaintiffs allege that since the issuance of said Letters Patent the defendant has wrongfully and without license or consent of the plaintiffs manufactured and sold, or contracted to sell, Draft Riggings or essential parts thereof embodying, or intended and designed to be used with other parts to embody, the invention set forth in said Letters Patent, particular reference being made to a contract to deliver certain Draft Riggings to The Pressed Steel Car Company for use on cars for the Boston & Maine Railroad.

Fifth. That the plaintiffs have caused to be affixed to all draft rigging manufactured by it under said Letters Patent the word "Patented," together with the date of the issuance of said Letters Patent, and that the defendant has profited by its infringement and the plaintiffs have been damaged thereby.

The plaintiffs therefore pray:

1. For an injunction, and a preliminary injunction pend-
3–5 ing this suit, restraining the defendant, its servants and agents from infringing the said Letters Patent.

2. For costs and an account of profits and damages, and that any

3. For such other and further relief as the circumstances of the damages assessed may be tripled.
case may require.

THE NATIONAL MALLEABLE
CASTINGS COMPANY,
By HENRY F. POPE, *President.*
JACOB J. BYERS.

CHARLES NEAVE,
Solicitor and of Counsel,
5 Nassau Street, New York City.

STATE OF OHIO,
County of Cuyahoga, ss:

On this 25th day of October, 1913, before me personally came Henry F. Pope, who, being by me duly sworn, deposed and said that he is the President of The National Malleable Castings Company, one of the plaintiffs herein; that he has read the foregoing bill of complaint; that the statements therein contained are true of his own knowledge, except so far as they are alleged to be stated on information and belief, as to which statements he believes them to be true, and he stated that he has signed and acknowledged the bill of complaint as President of said The National Malleable Castings Company, and by virtue of the authority vested in him by the Board of Directors of said Company, and that the plaintiffs' title to said Letters Patent is as set forth therein.

[SEAL.] HENRY F. POPE.

Sworn to before me this 25th day of October, 1913.

HARRY E. ORR,
Notary Public.

(Here follow diagrams marked pages 6, 8, 10, 12, and 14.)

No. 673,419. Patented May 7, 1901.

J. J. BYERS.

DRAFT RIGGING.

(Application filed Apr. 21, 1900.)

(No Model.) 4 Sheets—Sheet 1.

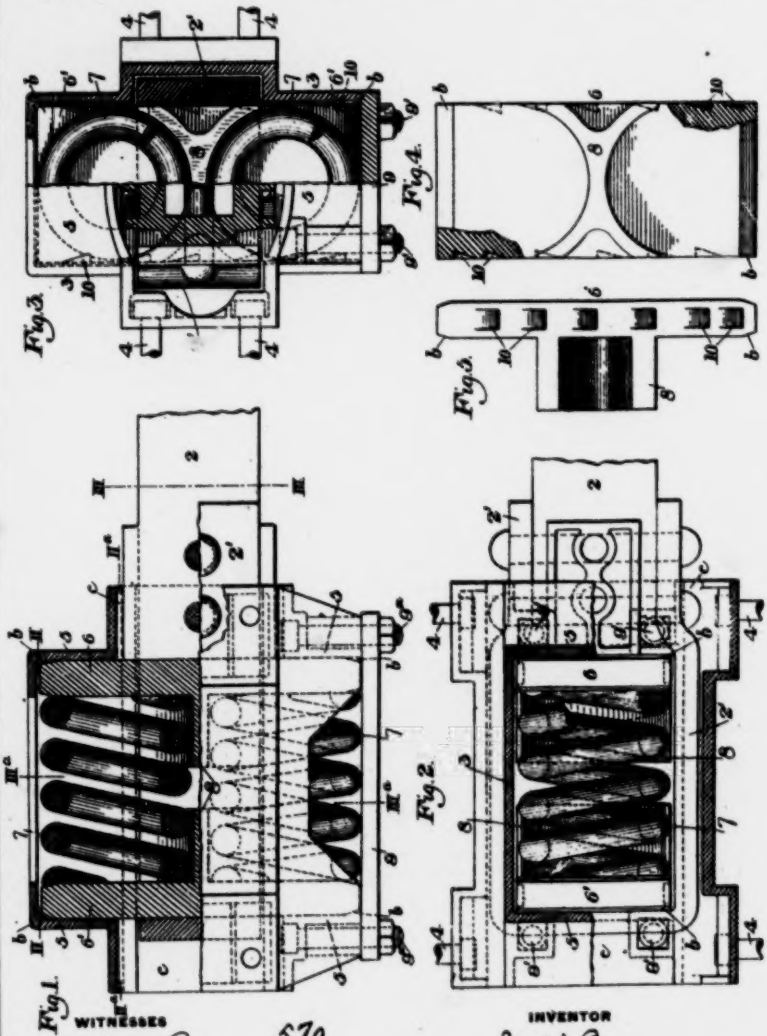

WITNESSES

L. A. Connery

Warren W. Swartz

570

Symington Co.
&
Nat. Mal. Casting Co.
} p 6

INVENTOR

Jacob J. Byers
by Bakewell & Bakewell
his Attorneys.

No. 673,419. Patented May 7, 1901.

J. J. BYERS.

DRAFT RIGGING.

(Application filed Apr. 21, 1900.)

(No Model.) 4 Sheets—Sheet 2.

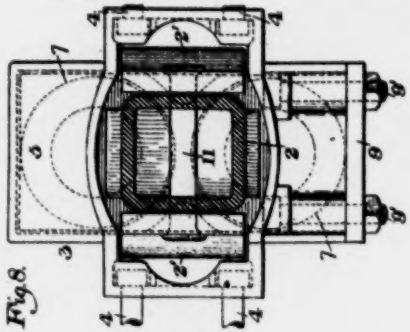

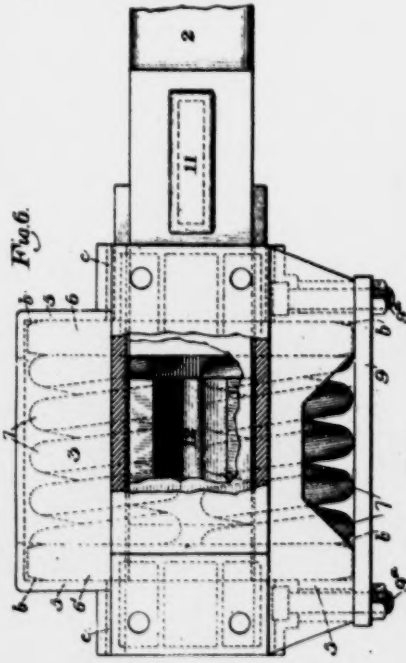

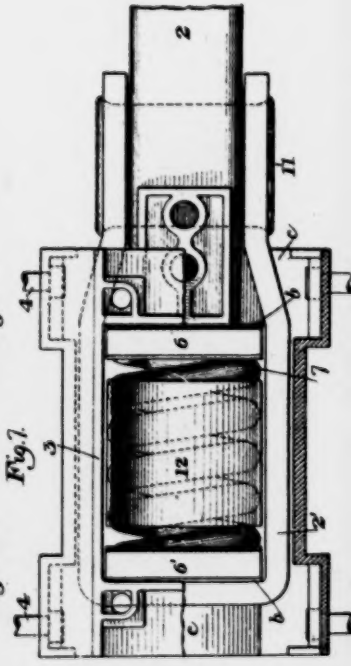

WITNESSES

L. A. Connery Jr.
Warren W. Swartz

570

Symmington Co. & Nat. Mal. Cast. Co. } $8

INVENTOR

Jacob J. Byers
by Baxewell & Baxewell
his Attorneys.

No. 673,419. Patented May 7, 1901.

J. J. BYERS.

DRAFT RIGGING.

(Application filed Apr. 21, 1900.)

(No Model.) 4 Sheets—Sheet 3.

Fig. 10.

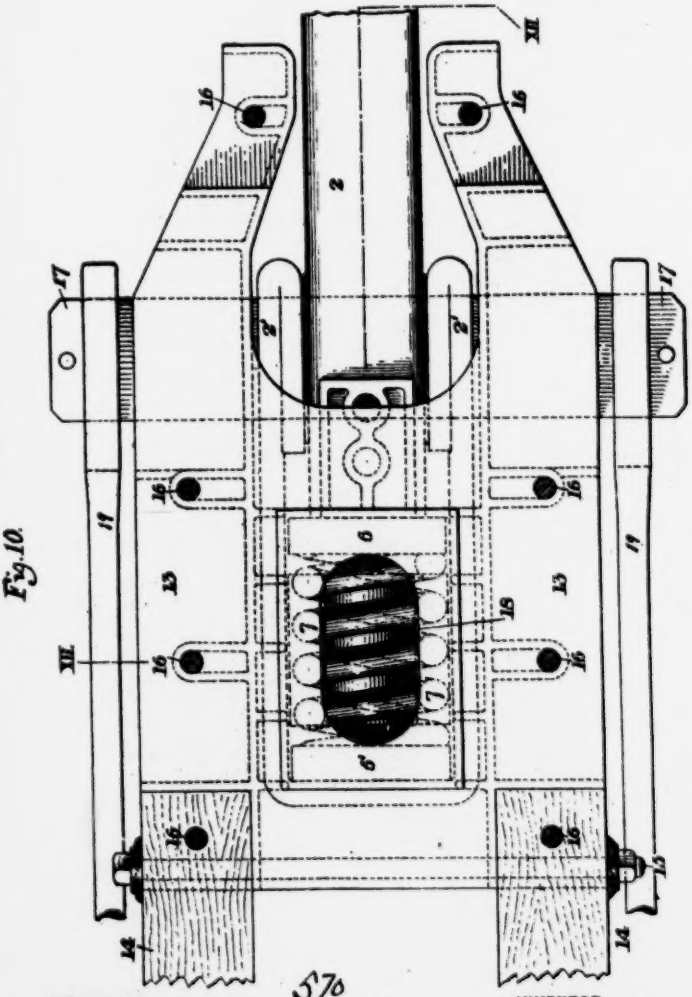

WITNESSES

L. A. Conner Jr.

Warren W. Swartz

570.

Symington Co
&
Nat Mal Cast Co } P10

INVENTOR

Jacob J. Byers
by Baxewell & Baxewell
his Attorneys.

No. 673,419 Patented May 7, 1901.

J. J. BYERS.

DRAFT RIGGING.

(Application filed Apr. 21, 1900.)

(No Model.) 4 Sheets—Sheet 4.

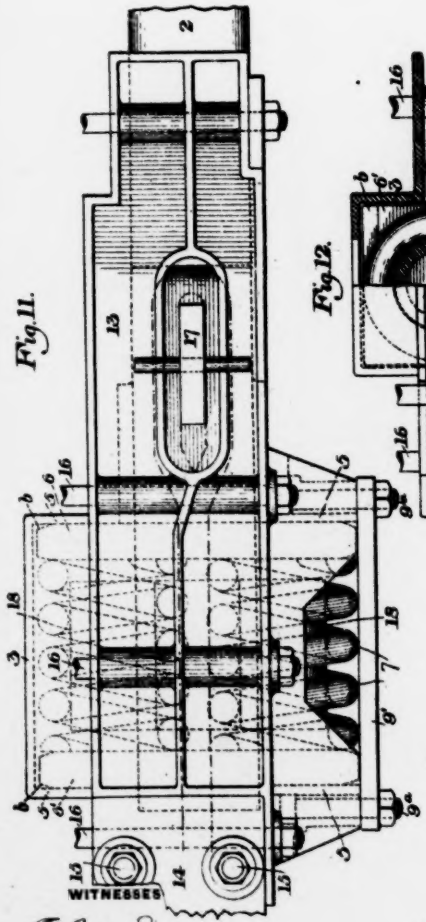

Fig. 11.

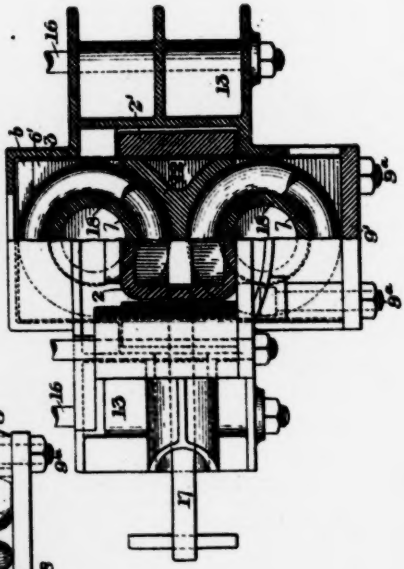

Fig. 12.

570
Symington Co
v
Nat Mal Cast Co } 712

WITNESSES

INVENTOR

Joseph J. Byers
by Bakewell & Bakewell
his Attorneys.

UNITED STATES PATENT OFFICE.

JACOB J. BYERS, OF CAMERON, MISSOURI, ASSIGNOR OF ONE-HALF TO THE NATIONAL MALLEABLE CASTINGS COMPANY, OF CLEVELAND, OHIO.

DRAFT-RIGGING.

SPECIFICATION forming part of Letters Patent No. 673,410, dated May 7, 1901.

Application filed April 21, 1900. Serial No. 13,744. (No model.)

To all whom it may concern:

Be it known that I, JACOB J. BYERS, of Cameron, in the county of Clinton and State of Missouri, have invented a new and useful Improvement in Draft-Riggings, of which the following is a full, clear, and exact description, reference being had to the accompanying drawings, forming part of this specification, in which—

Figure 1 is a side elevation showing the upper part of the figure in central longitudinal section. Fig. 2 is a sectional plan view on the lines II II and II[a] II[a] of Fig. 1. Fig. 3 is an end view, the left-hand portion of which is in vertical section on the line III III and the remainder in vertical section on the line III[a] III[a]. Fig. 4 is an elevation of the inner side of the follower. Fig. 5 is a side view of the follower. Fig. 6 is a side elevation of a modified construction. Fig. 7 is a bottom plan view of Fig. 6, partly in section and showing the bottom plate removed. Fig. 8 is an end elevation showing the draw-bar shank in section. Fig. 9 is an end view of the stop. Fig. 10 is a top plan view of a modified construction, showing the draft-arms integral with the part of the rigging which contains the springs. Fig. 11 is a side elevation of Fig. 10. Fig. 12 is a cross-section on the line XII XII of Fig. 10.

In Figs. 1, 2, and 3, 2 represents the shank of a draw-bar, and 3 represents a pocket which contains the springs of the draft-rigging and is set between draft-timbers, (not shown,) to which it is affixed by bolts 4 4. The pocket may be cast in a single piece and is provided with horizontal lugs 5 5, which extend across the pocket, above and below, and constitute abutments for the followers 6 6', which are set in the pocket. The pocket and lugs are suitably braced by metal ribs or flanges, as shown. 7 7' are the springs, placed, preferably, one above the other between the followers, and to hold them in place, as well as to limit the approach of the followers, I may provide the latter with projecting stops 8, which extend from such followers between the springs. The draw-bar shank 2 is connected with the rear follower 6' by a yoke 2', which is fixed to the draw-bar by riveting or otherwise and extends within the pocket, between the lugs and around the rear follower, as shown. The pocket is open at the bottom, so that the follower-plates and springs may be removed freely from within the yoke in a vertical direction without the necessity of disengaging the yoke from the draw-bar, since the follower-plates are not connected with the draw-bar otherwise than by being placed between the sides of the yoke. This removal is made possible by taking off a cap-plate 9, which closes the opening at the bottom of the pocket and is secured by bolts 9[a], and the follower-plates can then be pried out by means of a tool applied to toothed recesses 10, formed in the edges of the follower-plates. To facilitate the insertion of the follower-plates and springs, I prefer to bevel the ends of the follower-plates, as shown at *b b*. The pocket is preferably made alike at both ends, as shown in Figs. 1 to 3, with an opening *c* at each end for the passage of the draw-bar shank, so that it is reversible and can be turned in either direction.

In the figures on the second sheet of the drawings I show modifications of my invention, in which the draw-bar shank is attached to the yoke 2' by a rivet-key 11, which may be passed through the transverse slot ordinarily formed in draw-bars for the attachment of the so-called "American" continuous draft-rods and through slots in the arms of the yoke and is upset at the ends, as shown. In these figures also I show a stop-piece 12, made separate from the follower-plates and interposed between the springs, performing the same function as is performed by the projections from the follower-plates shown in Figs. 1 and 4.

In Figs. 10 to 12, on the third and fourth sheets of the drawings, I show my improvement applied to use with the American continuous system, in which the draw-bars at the opposite ends of the car are connected by transverse keys and longitudinal rods; and to this construction I intend to make specific claim in addition to my generic claims. In these figures I show the rigging provided with metal draft-arms 13, which may be cast integrally with each other and with the pocket above described and which are abutted against the ends of the draft-timbers 14, of

which they form a continuation and to which they are secured by bolts 15. The draft-arms are also secured to the sills above by bolts 16 and may be connected at the top and bottom as well as at the rear by integral webs or plates, it being necessary only to leave an opening at the bottom, through which the springs and followers may be removed, and to close said opening by a removable plate or cap 9'. The draw-bar is connected to the arms of the yoke by a key 17, which extends through the usual slot in the draw-bar, through slots in the arms of the yoke, which are preferably doubled, so as to give a better bearing for the key, and through slots in the draft-arms and is adapted to be connected with the draft-rods 19 of the continuous system. In addition to the stop 12 which I show in these figures I also show as an alternate construction stops 18, either hollow or solid, which may be set axially in the springs between the follower-plates. The draft-arms shown in these figures are preferably strengthened by flanges at the sides and constitute a strong and very desirable construction.

The advantages of my invention will be appreciated by those skilled in the art. The springs arranged one above the other, the pocket having horizontal lugs or abutments for the followers, the free removability of the springs and the followers from below from between the arms of the yoke and from the pocket, and the construction of the draft-arms shown in Fig. 10, together with the other items mentioned in the claims, constitute, severally and in combination, important parts of my invention.

I claim—

1. A draft-rigging having in combination with the draw-bar, a yoke, the arms of which are connected to the sides of the draw-bar, springs arranged one above the other within the yoke, and followers also arranged between the arms of the yoke, said springs and followers being removable from below, independently of the draw-bar; substantially as described.

2. A draft-rigging having a yoke, the arms of which are adapted to be connected to the sides of a draw-bar, springs arranged one above the other between the arms of the yoke, and followers adapted to fit against the ends of both springs, and also contained between the ends of the yoke, said springs and followers being removable from below independently of the draw-bar; substantially as described.

3. A draft-rigging having a pocket, lugs, extending horizontally across the pocket at the upper and lower portions thereof respectively, followers within the pocket which bear against the lugs, and a yoke which extends within the pocket between the lugs and around the rear follower; substantially as described.

4. A draft-rigging having a pocket, lugs extending horizontally across the pocket at the upper and lower portions thereof respectively, followers within the pocket which bear against the lugs, a yoke which extends within the pocket between the lugs and around the rear follower, and braces connected with the lugs and pocket; substantially as described.

5. A draft-rigging having a yoke open at the bottom and having a spring and followers arranged between the arms of the yoke, and a pocket within which the yoke extends and which is also open at the bottom to permit removal of the spring and followers independently of the draw-bar; substantially as described.

6. A draft-rigging having a yoke open at the bottom and having a spring and followers arranged between the arms of the yoke, a pocket which contains the yoke and is also open at the bottom to permit removal of the spring and followers, and a detachable closure for the opening in the pocket; substantially as described.

7. A draft-rigging having, in combination with the draw-bar and spring mechanism, a yoke the arms of which are connected to the sides of the draw-bar, a pocket within which the yoke extends, and a key which extends horizontally through the draw-bar and yoke, and through slots in the walls of the pocket; substantially as described.

8. A draft-rigging having springs set one above the other, and a follower engaging the ends of both springs and having at the middle a stop projection which separates the springs; substantially as described.

9. A draft-rigging having springs set vertically one above the other, and a single pocket having at opposite ends horizontal lugs at the top and bottom of the pockets, followers in the pocket set between the lugs, and adapted to receive a spring between them; and a yoke which extends within the pocket between the lugs; substantially as described.

10. A draft-rigging having springs arranged vertically, one above the other, followers, a yoke between the sides of which the springs and followers are set, said springs and followers being removable vertically from below independently of the draw-bar; substantially as described.

In testimony whereof I have hereunto set my hand this 6th day of April, 1900.

JACOB J. BYERS.

Witnesses:
WILL H. BROWN,
JOHN A. LIVINGSTONE.

15 PLAINTIFFS' EXHIBIT No. 8.

District Court of the United States, District of Maine.

In Equity. No. 705.

On Patent No. 673,419.

THE NATIONAL MALLEABLE CASTINGS COMPANY and JACOB J. BYERS, Plaintiffs,

vs.

THE T. H. SYMINGTON COMPANY, Defendant.

Interrogatories and Answers.

Plaintiffs' Interrogatories and Answers under Oath by T. H. Symington, President of the Defendant Corporation.

Interrogatory No. 1.

Did the defendant company during 1913 and prior to the filing of the bill herein, sell or contract to sell to the Pressed Steel Car Company, for installation on railway cars of the Boston & Maine Railroad, side castings for draft riggings intended to be attached to the draft sills of a car, similar to those marked by the letter "A" in the attached blue print?

Interrogatory No. 2.

Did the defendant company during 1913 and prior to the filing of the bill herein, sell or contract to sell to the Pressed Steel Car Company, for installation on railway cars of the Boston & Maine Railroad, spacer blocks for draft riggings, similar to those marked "B" in the attached blue print?

16 Answers to Interrogatories Nos. 1 and 2.

The T. H. Symington Company did not, during the period named, sell, for installation on the Boston & Maine Railroad, any cheek castings or spacer blocks resembling those shown in the blue print annexed to the interrogatories. It did, during August, 1913, agree to furnish to the Pressed Steel Car Company, cheek castings and spacer blocks which I understand were for application to certain center constructions which that company was bidding on for the Boston & Maine Railroad. The parts referred to are illustrated in the blue prints annexed hereto, marked Card G-34 and Card F-1653. These parts correspond to the side or cheek castings and spacer blocks, marked "A" and "B" in the drawing annexed to the interrogatories. No payment for these parts was received nor were any of them delivered.

Interrogatory No. 3.

Did the defendant company during 1913 and prior to the filing of the bill herein, sell or contract to sell to the Pressed Steel Car Company, for installation on railway cars of the Boston & Maine Railroad, draft rigging parts in addition to those marked "A" and "B" in the attached blue print, and if so, what were such parts?

Answer to Interrogatory No. 3.

It did not.

Interrogatory No. 4.

Was the defendant company during 1913 and prior to the filing of the bill herein, supplied with a blue print or drawing by the Pressed Steel Car Company or the Boston & Maine Railroad or by both of said companies, similar to the attached blue print, for the purpose of obtaining bids with regard to the draft rigging parts "A" and "B" marked thereon, or any other draft rigging parts shown thereon, or for the purpose of furnishing draft rigging parts similar to the parts "A" and "B" marked thereon, or any other parts,
17 for the Pressed Steel Car Company for installation on railroad cars for the Boston & Maine Railroad?

Answer to Interrogatory No. 4.

The defendant, The T. H. Symington Company, did during the period named, receive a blue print which I believe originated with the Boston & Maine Railroad Company to be used as a basis for bids for cheek castings and spacer blocks for draft gears, which parts correspond to the side or cheek castings and spacer blocks marked "A" and "B" in the drawing annexed to the interrogatories.

Interrogatory No. 5.

Did the Pressed Steel Car Company during the year 1913 and prior to the filing of the bill herein, make an inquiry directed to the defendant, asking them for bids on draft rigging parts intended to be installed on cars for the Boston and Maine Railroad Company? If so, please produce such inquiry and any accompanying papers, such as blue prints or drawings showing the construction to which the inquiry related.

Answer to Interrogatory No. 5.

The business which we did with the Pressed Steel Car Company was solicited personally by one of our representatives and these negotiations were not in writing. A blue print, referred to in the previous answer, which I believe originated with the Boston & Maine Railroad Company, was submitted to us and is hereto attached.

Interrogatory No. 6.

Were the draft rigging parts sold or contracted to be sold by defendant during the year 1913 and prior to the filing of the bill herein to the Pressed Steel Car Company for installation on cars of the Boston & Maine Railroad intended to be assembled and used in the manner shown in the attached blue print?

18 Answer to Interrogatory No. 6.

As stated in the answer to the first interrogatory, we made no such sale during the period specified. The draft rigging parts, namely cheek plates and spacer blocks, which we agreed to furnish, while they were capable of being otherwise utilized, could be assembled in accordance with the blue print attached to the interrogatories and are preferably so assembled, as thus assembled, they form a structure in exact accordance with the U. S. Patent to Emerick, No. 693,643, which is the property of the defendant in this case, but the parts referred to were never during the period named, put into actual use in the patented combination covered by any of the claims of the patent in suit.

Interrogatory No. 7.

Did the Pressed Steel Car Company, during the year 1913 and prior to the filing of the bill herein, furnish the defendant with any drawing or blue print showing the construction of the castings or parts which defendant contracted to sell to the Pressed Steel Car Company for installation on cars of the Boston & Maine Railroad? If so, please produce such drawing or blue print.

Answer to Interrogatory No. 7.

A blue print was submitted to our company during the period named, as a basis for bids for draft gear parts to be installed on the cars of the Boston & Maine Railroad Company. There was no writing, no deposit and no delivery. The annexed print 11841-C, is a duplicate of this.

Interrogatory No. 8.

Did the Pressed Steel Car Company, during the year 1913 and prior to the filing of the bill herein, send to defendant specifications describing the draft rigging parts to be manufatcured and sold by defendant to the Pressed Steel Car Company and intended to be installed upon cars of the Boston & Maine Railroad? If so,
19 please produce such specifications and any drawings or blue prints accompanying same and showing the construction to which the specifications related.

Answer to Interrogatory No. 8.

The defendant received no specifications describing the cheek plates and spacer blocks which were the subject of the verbal agree-

ment to which I understand this question relates. The drawing is referred to in answer to interrogatory No. 6.

Interrogatory No. 9.

Did the defendant, The T. H. Symington Company, agree, during the year 1913 and prior to the filing of the bill herein, to hold the Pressed Steel Car Company harmless by reason of any suits filed against the Pressed Steel Car Company regarding the infringment of any patent or patents because of the sale to the Boston & Maine Railroad Company of the draft rigging parts furnished to the Pressed Steel Car Company by the defendant?

Answer to Interrogatory No. 9.

Defendant is instructed by this Court that it need not answer.

(Here follow diagrams marked pages 20 to 20c incl.